EMC of SPE-Connectors and Assemblies – Simulation and Measuring

Dr. Thomas Gneiting, AdMOS GmbH
Dipl.-Ing. Ralf Damm, Dipl.-Ing. Bernhard Mund, bda connectivity GmbH
Dipl.-Ing. Ralf Tillmanns, Weidmüller GmbH & Co KG.

Anwenderkongress Steckverbinder, Vogel Verlag, Würzburg, 03. - 05. Juni 2024

- Introduction
  - Standards
  - Triaxial procedure
- Simulation und Analysis
  - Motivation & Method
  - Quantitative und qualitative Analysis
- Comparison of Simulation und Measuring
  - Coupling attenuation and und Unbalance attenuation of UTP cables
  - Application on double shielded STP cable with high screning effectiveness
- Summary and Outlook

Standards SPE-Cables and -Connectors

Standard	Description
IEC 61156-11	Multicore and symmetrical pair/quad cables for digital communications - Part 11: Symmetrical single pair cables with transmission characteristics up to 1,25 GHz - Horizontal floor wiring - Sectional specification
IEC 61156-12	Multicore and symmetrical pair/quad cables for digital communications - Part 12: Symmetrical single pair cables with transmission characteristics up to 600 MHz - Work area wiring - Sectional specification
IEC 61156-13	Multicore and symmetrical pair/quad cables for digital communications - Part 13: Symmetrical single pair cables with transmission characteristics up to 20 MHz - Horizontal floor wiring - Sectional specification
IEC 61156-14	Multicore and symmetrical pair/ quad cables for digital communications - Part 14: Symmetrical single pair cables with transmission characteristics up to 20 MHz – Work area wiring - Sectional specification
IEC 63171 series	Connectors for electrical and electronic equipment – Shielded or unshielded free and fixed connectors for balanced single- pair data transmission with current carrying capacity – General requirements and tests

Motivation for Simulation

- Realistic representation of quantitative results to assess whether a design meets the requirements (standards). :
  - Screening attenuation a_s
  - Coupling attenuation a_c
  - Transfer impedance Z_T
- The visualization serves as input for product development :
  - Trouble spots
  - Regions with insufficient shielding

Coupling Attenuation – Principle, IEC 62153-4-9

The coupling attenuation of balanced SPE cables is the superposition of the Unbalance attenuation of the pair and the screening attenuation of the screen (or screens).

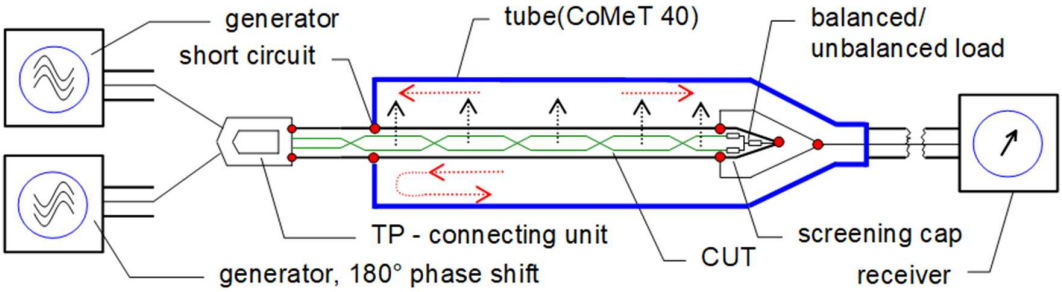

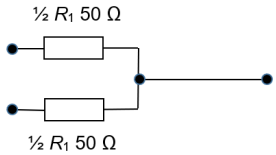

matching resistors for differential mode and for common mode

The balanced pair is fed with a 100 Ohm signal by two 50 Ohm generators with 180° phase shift (virtual balun). Energy couples from the "differential mode" into the "common mode" (mode conversion) and then from the "common mode" into the measuring tube (the outer circuit).

The short circuit at the near end causes a total reflection and the complete energy which coupled into the outer circuit is travelling to the receiver and is measured there.

Coupling Attenuation of Connectors & Assemblies

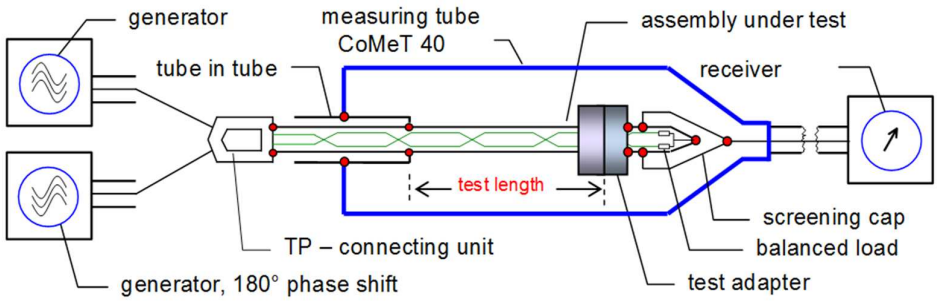

IEC 62153-4-7

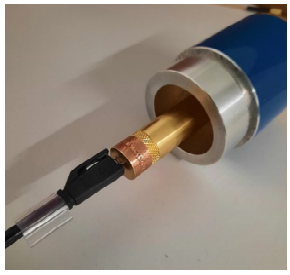

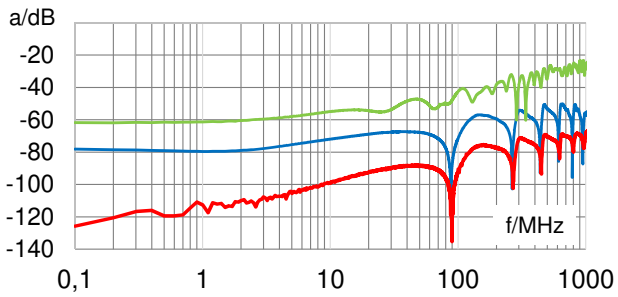

- Unbalance attenuation (TCL)
- Screening attenuation a_s
- Coupling attenuation a_c

typical test result of an SPE assembly

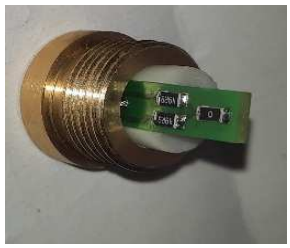

Model of Triaxial Test Set-up in Simulation Environment

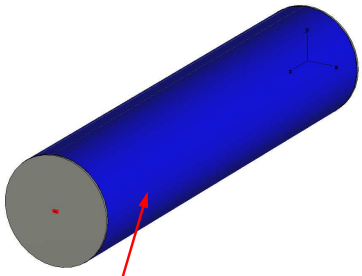

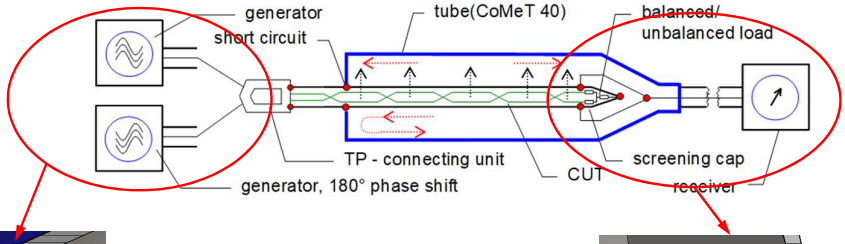

shortened view of measuring tube with connection

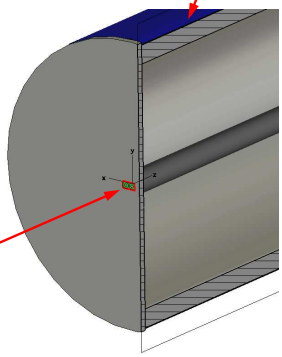

feeding via differential waveguide

coupling via waveguides with inner circuit terminated by resistors

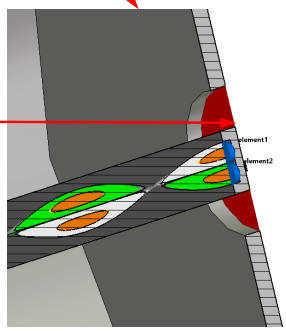

Model for Measurement of a Connector

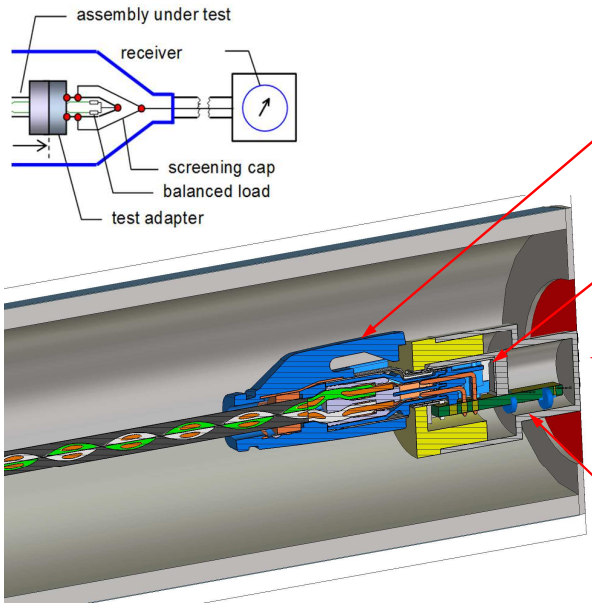

connector with UTP cable

test adapter with SPE socket & PCB

to 50Ω receiver

matching resistors on PCB

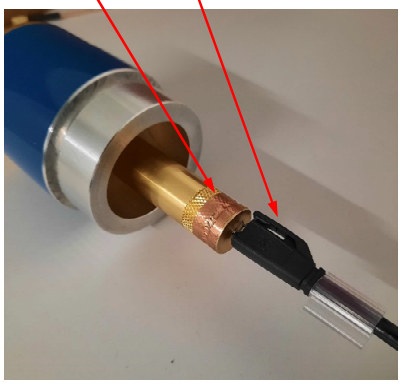

Example of an Unshielded Twisted Pair Cable (UTP)

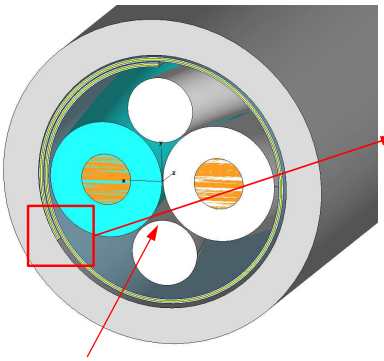

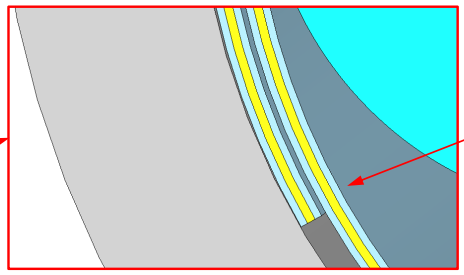

Foil shield made of Al foil with insulator on both sides.
Overlap approx. 30%

Twisted Pair cable with two filler elements and foil screen

Periodic interruption of the foil screen through transverse slots (barrier foil), therefore the cable is considered "unshielded"

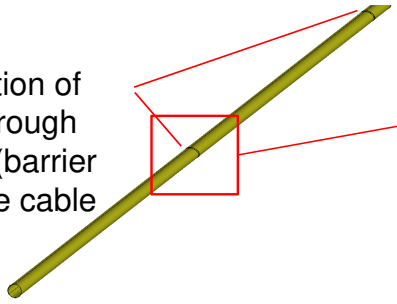

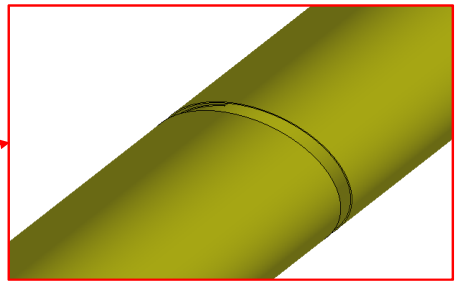

Worst Case Simulation

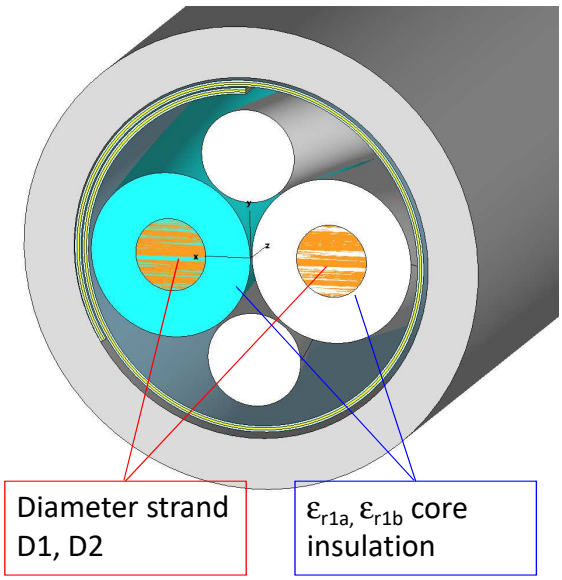

Variation of cable characteristics by two parameters:

- Diameter of strands D1, D2: ±1.4% from variation of ohmic resistance (± 2%)
- Dielectric constant of cable jacket: ε_{r1a}, ε_{r1b} ± 0.05 by estimation

Calculations

Transverse conversion loss TCL as measure for balance/symmetrie of cable construction:

$$TCL = S_{cd11}$$

Coupling attenuation a_c, calculated by S-parameter S_{sd21}

$$a_c = -S_{sd21} + 10 \bullet log_{10} \left| \frac{2 \bullet Z_S}{Z_0} \right|$$

$$a_c = -S_{sd21} + 7{,}78\ dB$$

where

S_{sd21} logarthmic value of the forward S-parameter for transmission; Feeding of the in differential mode and measured single ended.

Z_S normalized value of characteristic impedance Z_S =150 Ohm

Z_0 system impedance

Comparison Measurement – Simulation, TCL and a_c

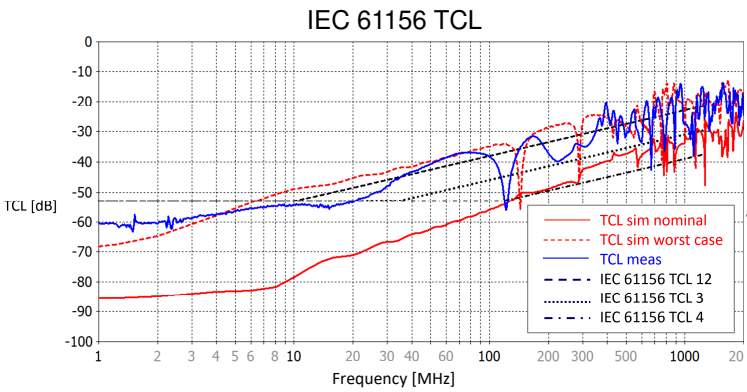

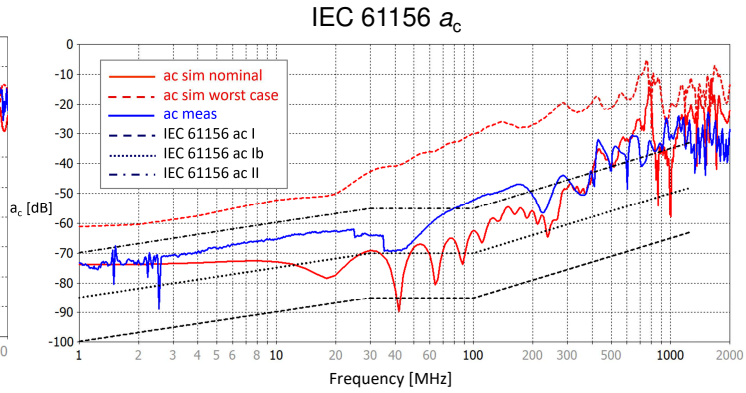

- TCL and a_c are below the limits of the cable class with the lowest requirements
- in the range up to 20 MHz only → Cable suitable for IEC61156-13/14 up to 20MHz.
- Measurement curves stay between the simulated values with the ideal nominal parameters and the worst-case parameters.

Propagation of Disturbance in the Cable & Radiation

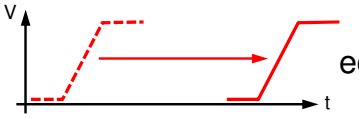

edge-shaped signal through cable

E-field emerges from the breaks in the screen.

cable without tolerance (nominal)

cable with Worst-Case tolerances

Double Screened STP cable

replica of the braided screen using a solid screen with breakouts.

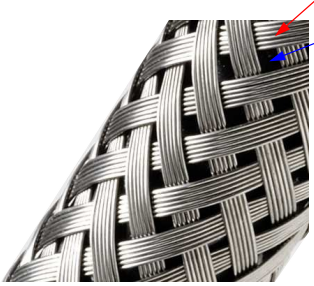

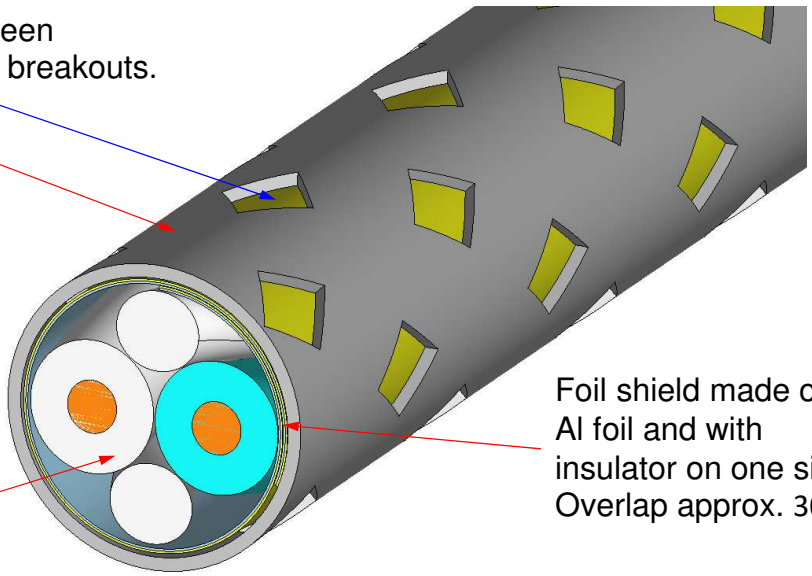

Twisted pair cable with two fillers

Foil shield made of Al foil and with insulator on one side. Overlap approx. 30%

Comparison Measurement – Simulation, TCL and a_c

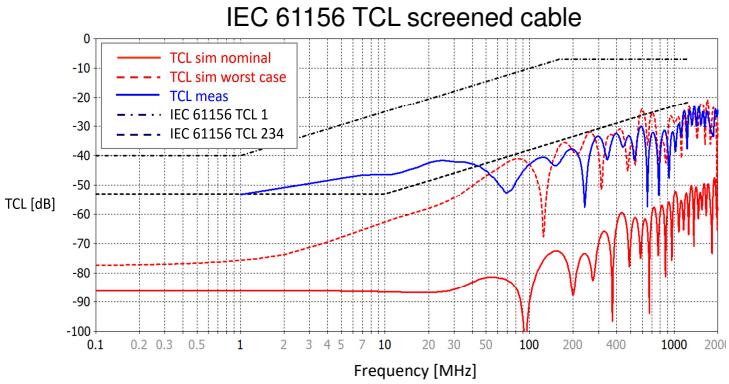

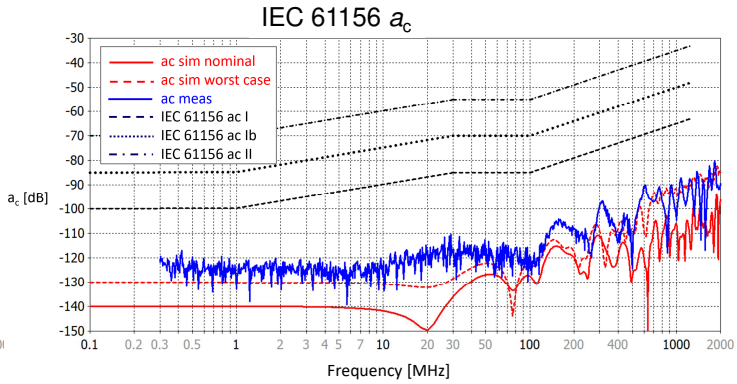

- Good match between measurement – worst case simulation for TCL and a_c.
- Simulation method with simulation of the thin foil screen and the approximation of the braided shield allows a good prediction of the radiation behavior of a cable construction.

Propagation of Interference in the Cable and Radiation

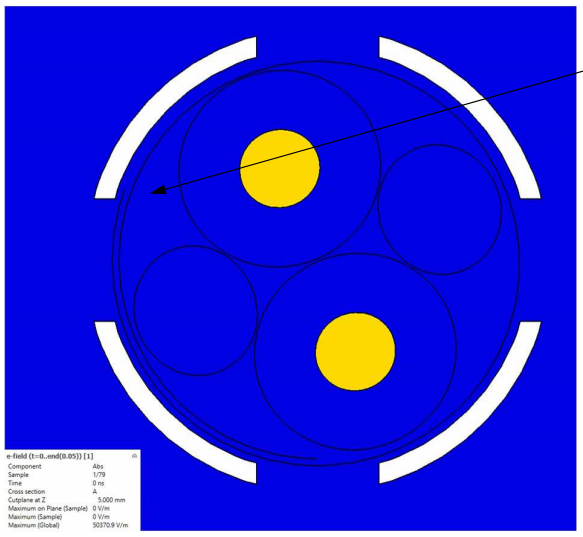

Radiation of E-field through
1. overlapping foil
2. breaks in the braid

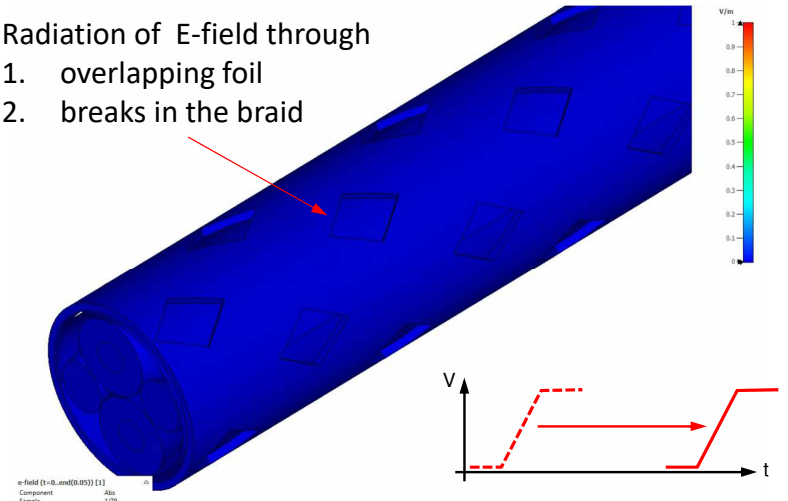

Edge-shaped signal through the cable

Conclusion

- Identical procedure (triaxial method) for simulation and measurement:
  - Simulation of the standardized arrangement produces realistic EMC characteristics for comparison with the given limits.
  - Visualization of defects and regions of poor shielding → input for design
  - Cheap and effective design process
- Cables with very good shielding properties can be reproduced with high accuracy using 3D simulation
- Statements about the screening characteristics can be made even before patterns are available.

Literature and Standards

[1] Thomas Gneiting & Bernhard Mund, Analysis, optimization, and verification of an HV connector, Proceedings of the IWCS 2021 Virtual Conference, October 2021

[2] Ralf Damm, Bernhard Mund et al. EMC of SPE cables, connectors, and assemblies, 2022 IWCS Industry Forum, Providence, RI, USA, October 2022

[3] R. Damm, D. Hess, B. Mund & R. Tillmanns, Coupling attenuation & Bursttest on balanced cables and cabling systems, Proc. of the 72nd IWCS Conference, Orlando, FL, USA, September 2023

[4] CST Suite 2023 Help, Dassault Systèmes

[5] C. Pfeiler, A. Waßmuth; Approach to Analysis and Solution for Alien Crosstalk Requirements of Unscreened Cables for Digital Communications, S. 128-134; Proc. Of the 55th IWCS, 2006

[6] IEC 63171-n series – SPE connectors for balanced single-pair data transmission with current-carrying capacity

[7] IEC 61156-12: Symmetrical single pair cables with transmission characteristics up to 1,25 GHz - Work area wiring - Sectional specification.

[8] IEC 61156-14: Symmetrical single pair cables with transmission characteristics up to 1,25 GHz – Work area wiring - Sectional specification

[9] IEC 62153-4-7, Test method for measuring transfer impedance and screening attenuation or coupling attenuation on connectors and cable assemblies